Sauna (1,8 + m)

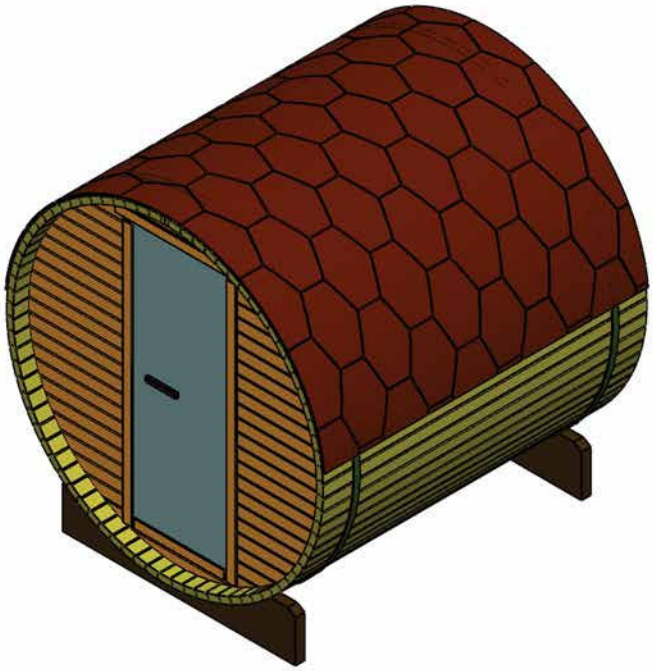

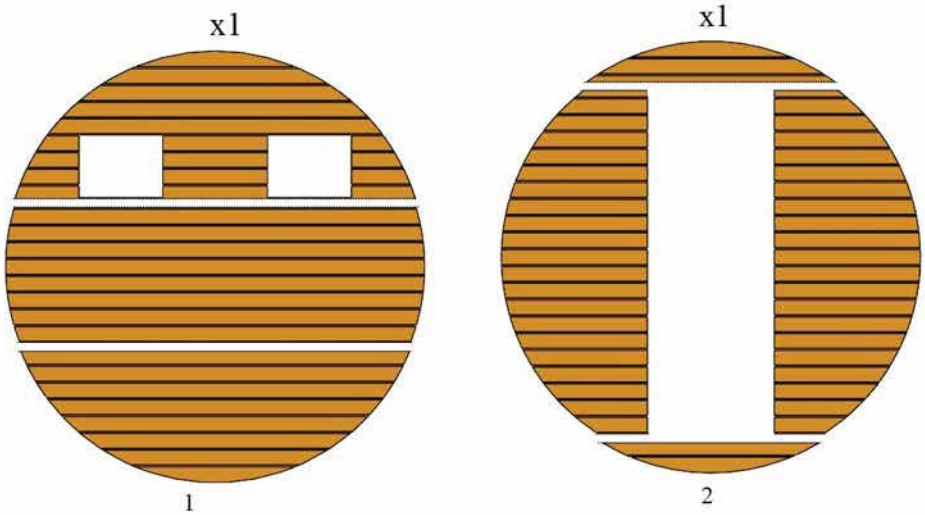

bsaunas.com

+1 (833) 727-0404

+1 (705) 727-0404

bsaunas
INDOOR & OUTDOOR

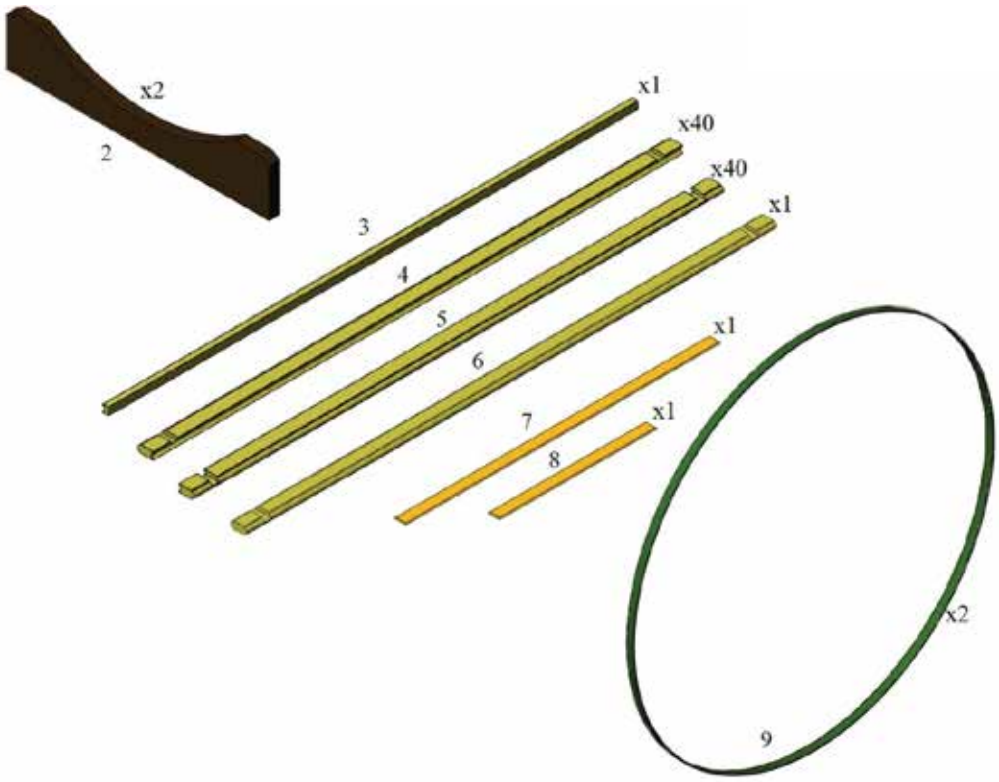

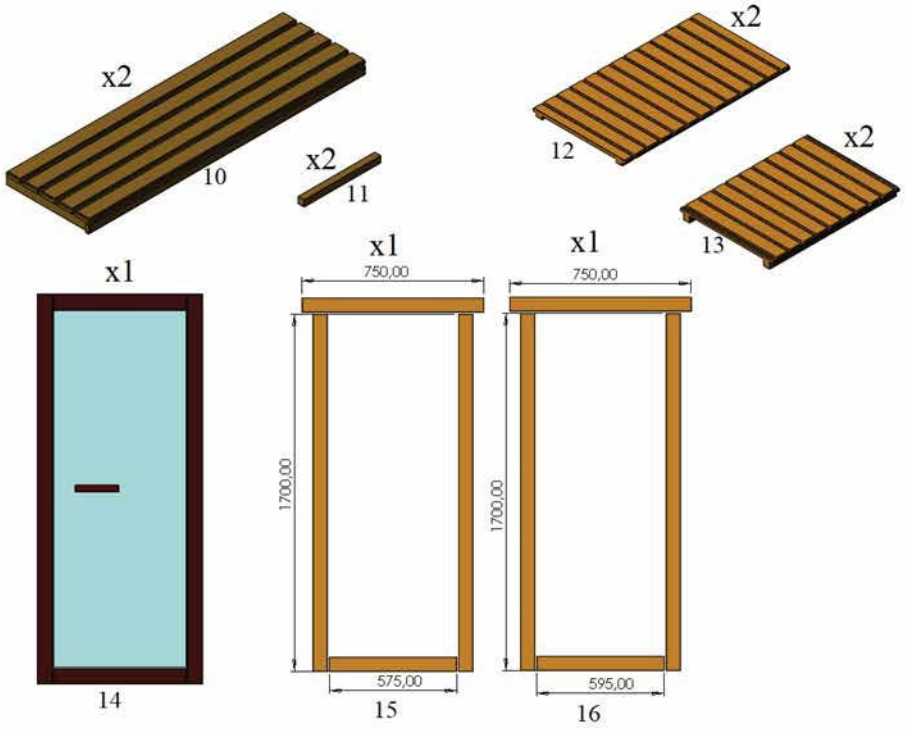

bsaunas.com

+1 (833) 727-0404

+1 (705) 727-0404

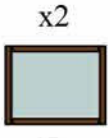

17

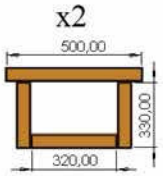

18

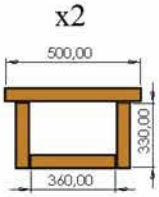

19

20

21 6*60 мм x200

22 6*80 мм x12

23 6*120 мм x84

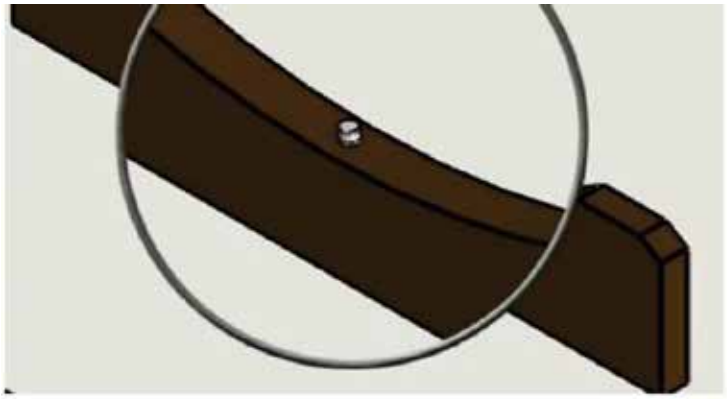

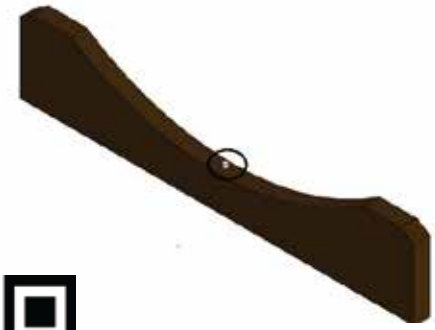

bsaunas.com

+1 (833) 727-0404

+1 (705) 727-0404

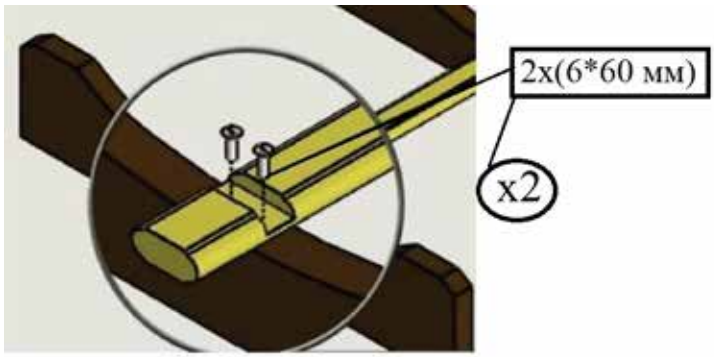

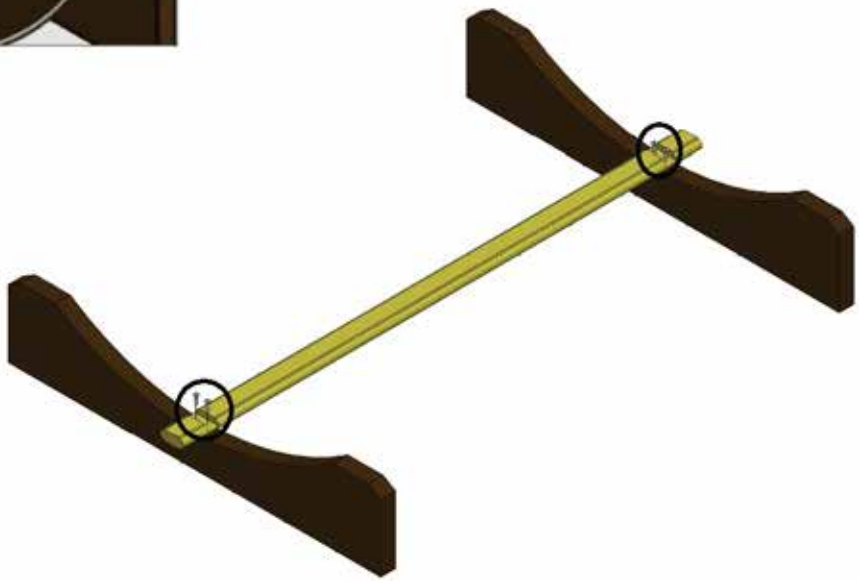

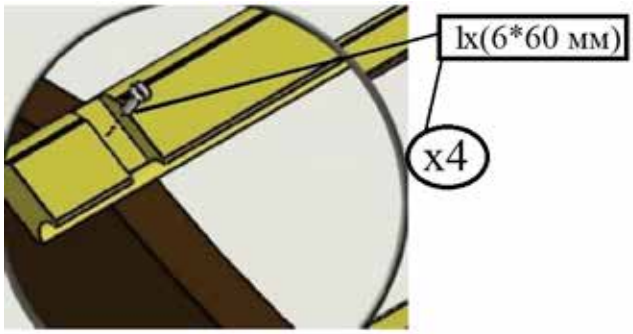

bsaunas.com

+1 (833) 727-0404

+1 (705) 727-0404

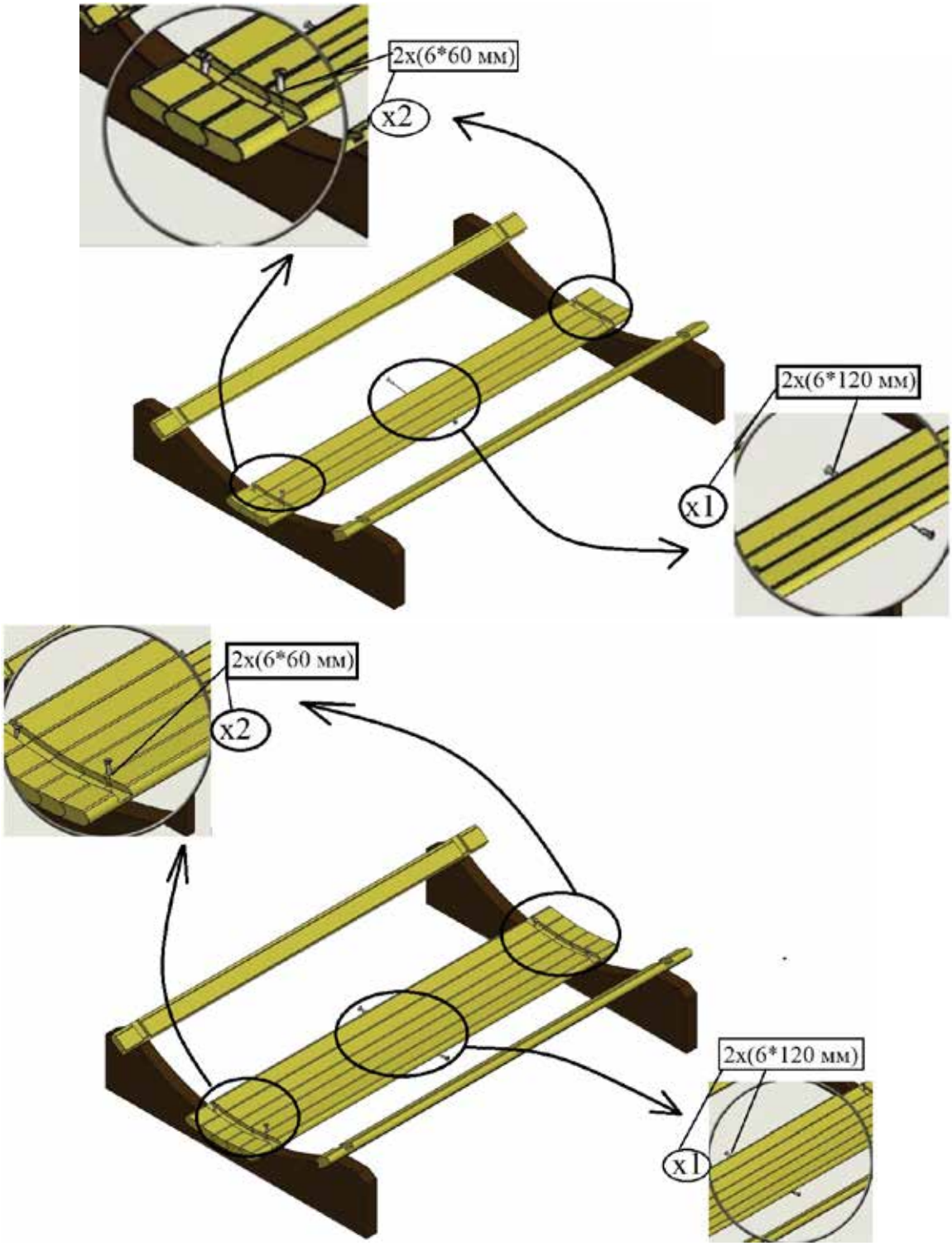

bsaunas.com

+1 (833) 727-0404

+1 (705) 727-0404

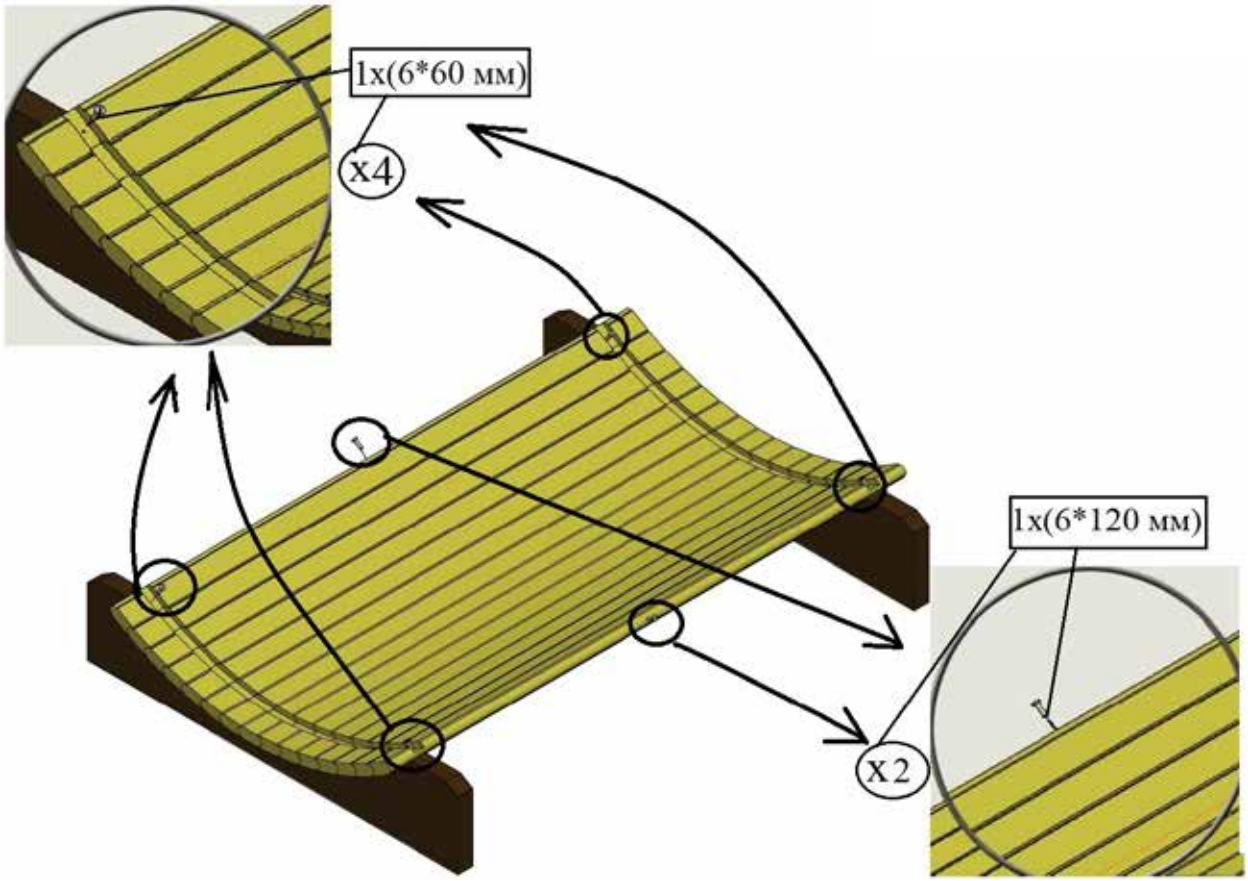

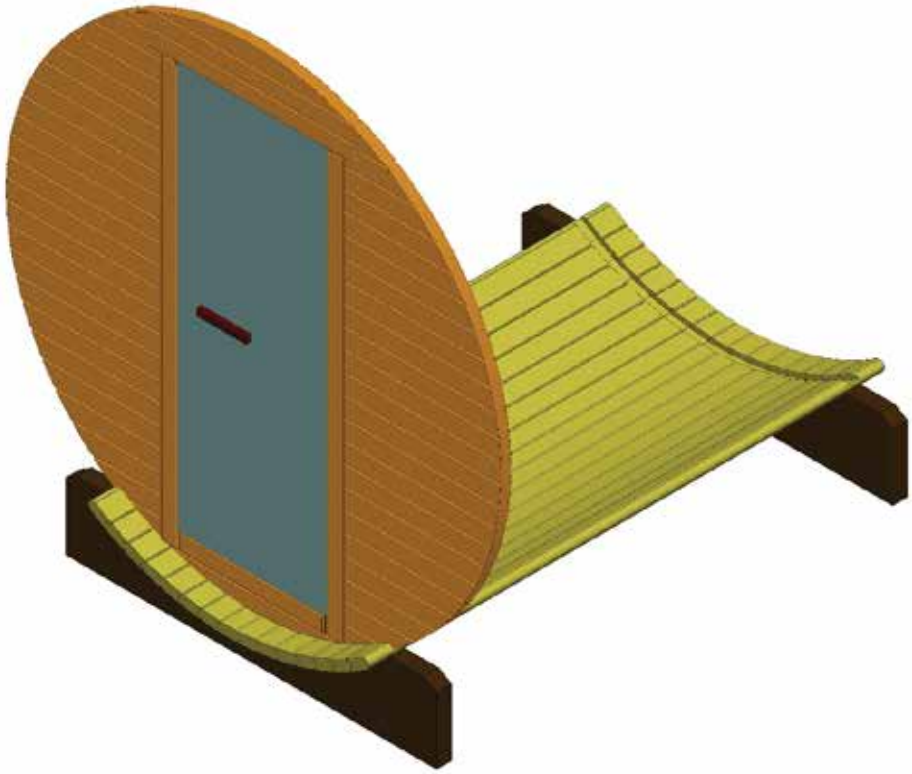

+1 (833) 727-0404
+1 (705) 727-0404
bsaunas.com

bsaunas
INDOOR & OUTDOOR

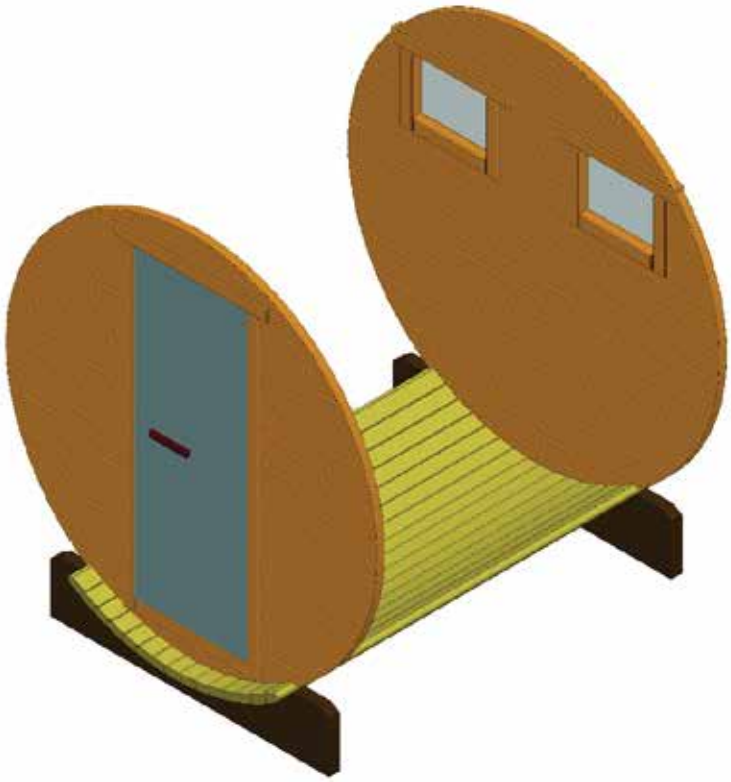

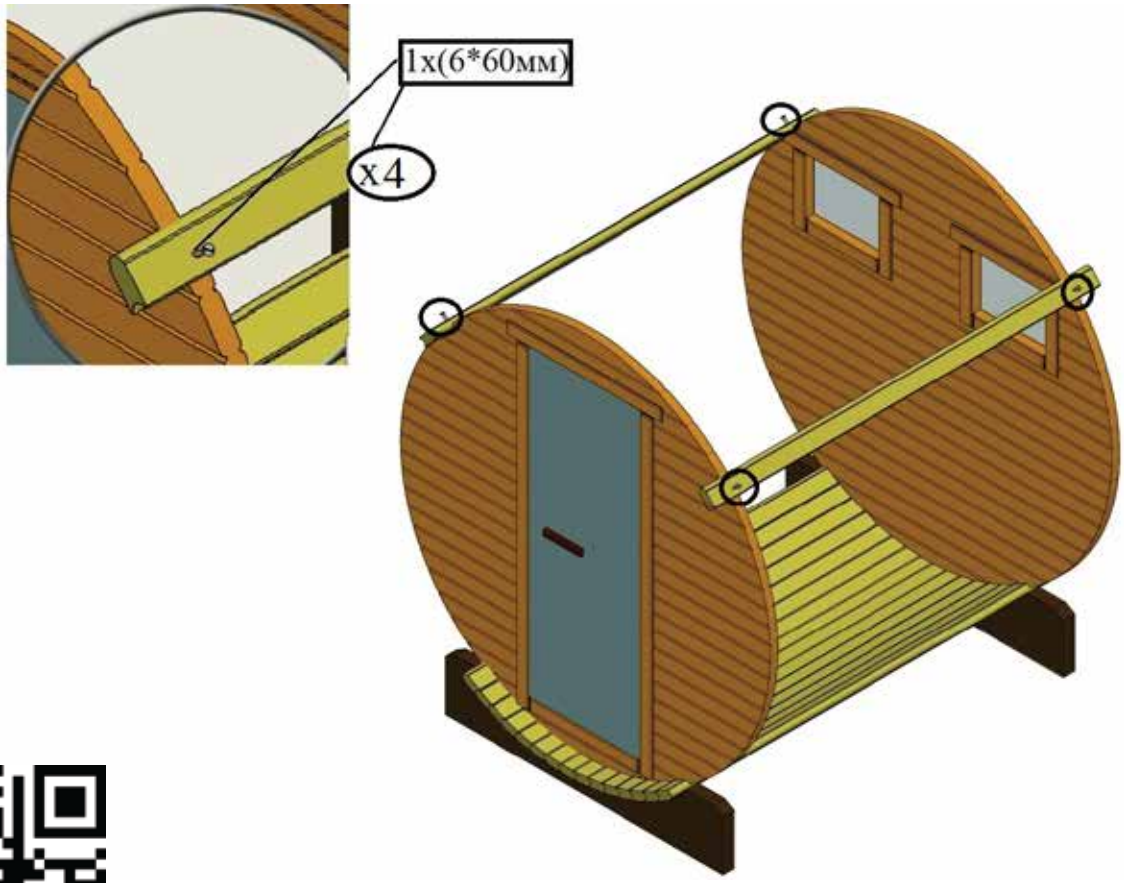

bsaunas.com

+1 (833) 727-0404

+1 (705) 727-0404

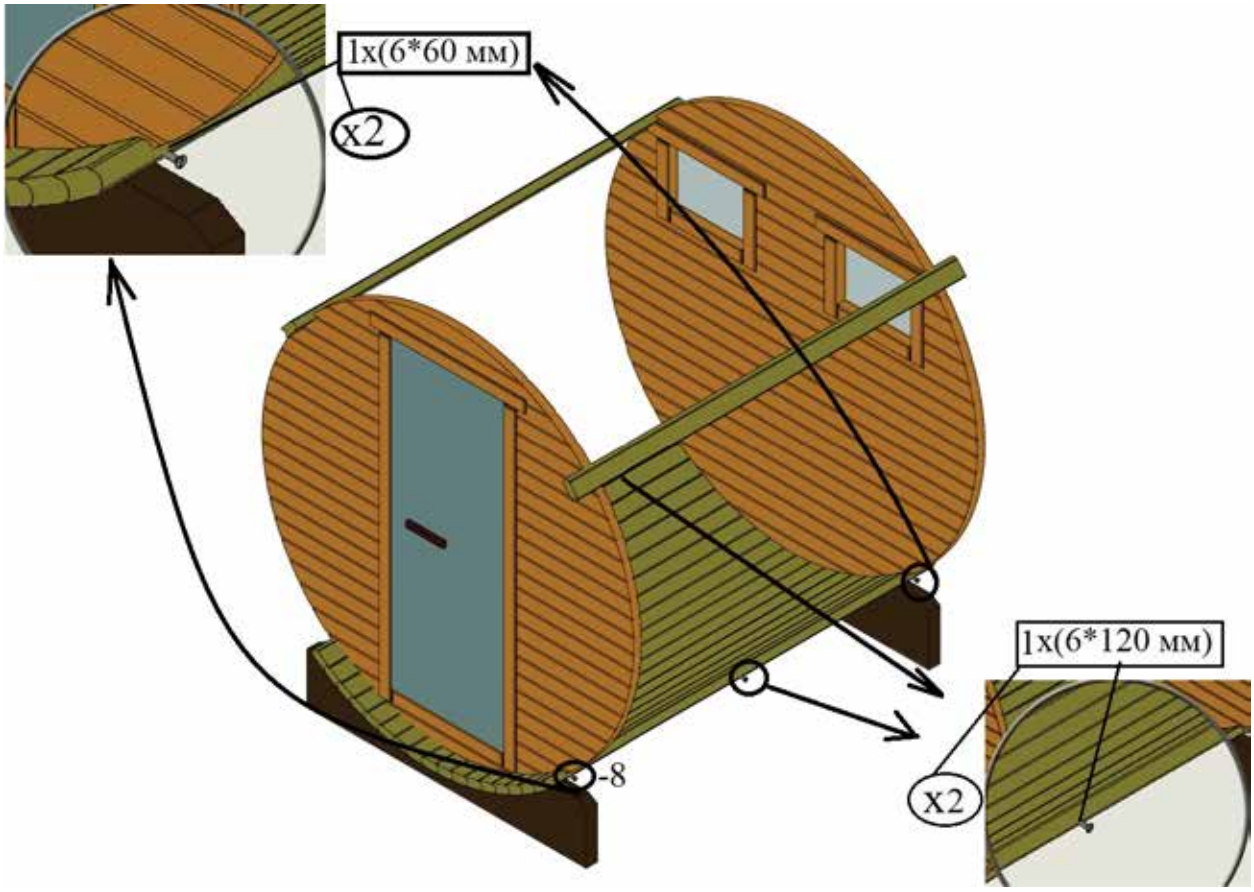

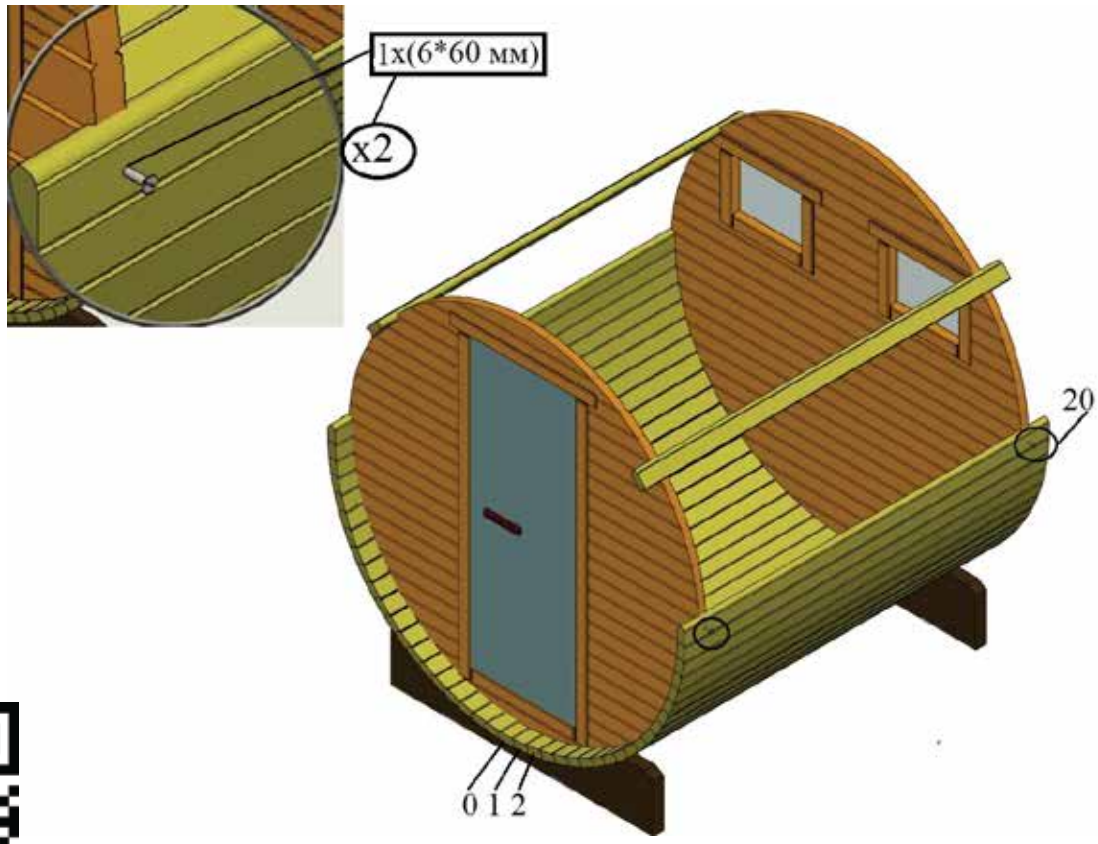

bsaunas.com

+1 (833) 727-0404

+1 (705) 727-0404

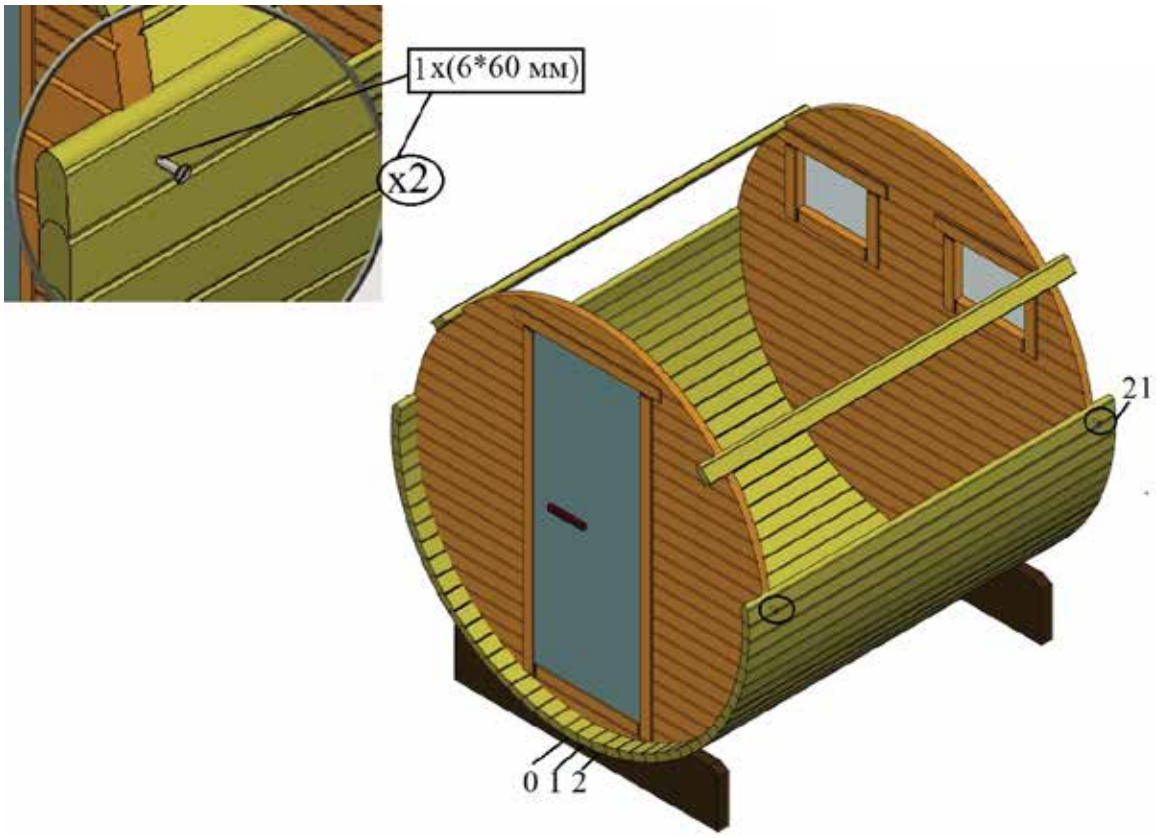

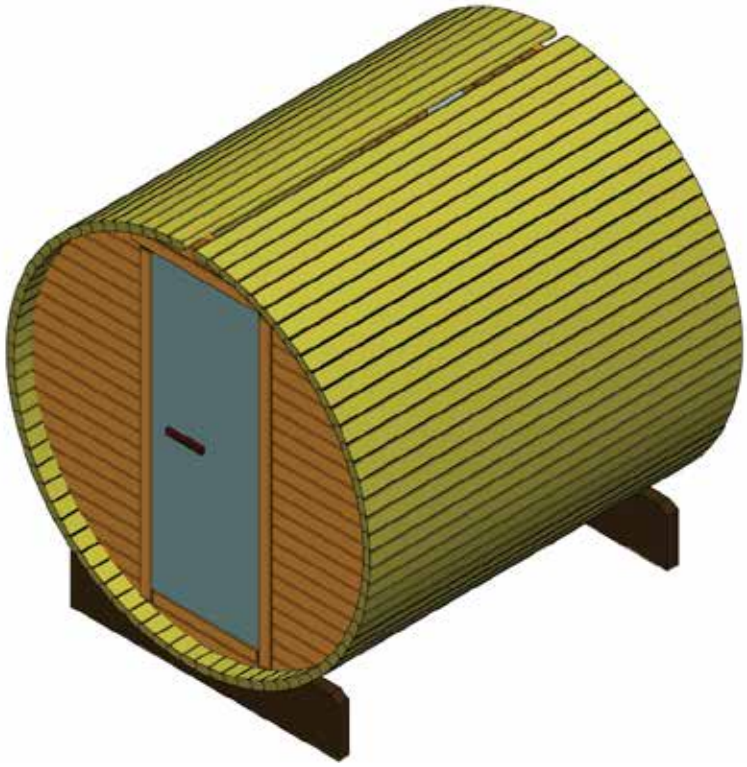

bsaunas.com
+1 (833) 727-0404
+1 (705) 727-0404

bsaunas
INDOOR & OUTDOOR

bsaunas.com

+1 (833) 727-0404

+1 (705) 727-0404

bsaunas
INDOOR & OUTDOOR

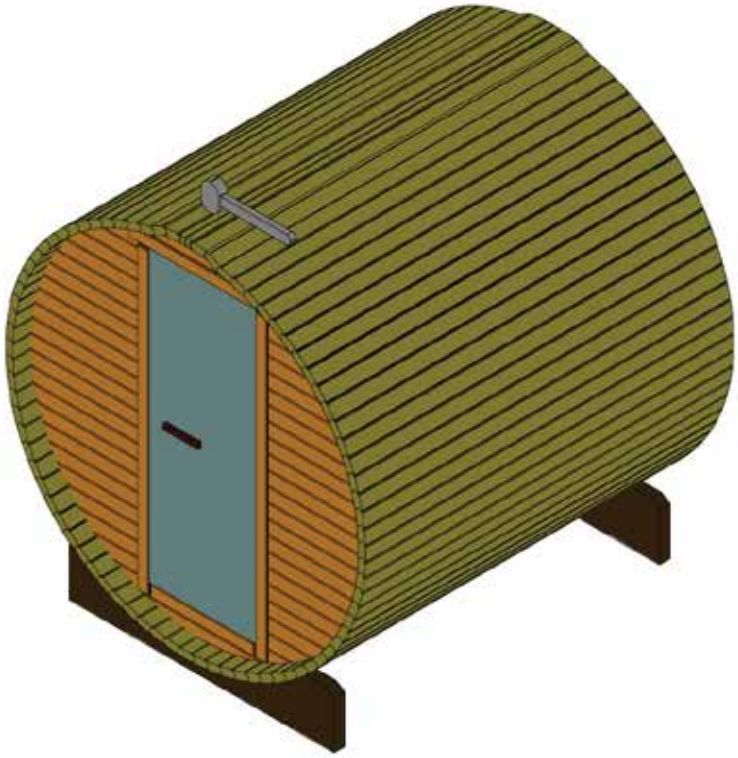

bsaunas.com

+1 (833) 727-0404

+1 (705) 727-0404

bsaunas
INDOOR & OUTDOOR

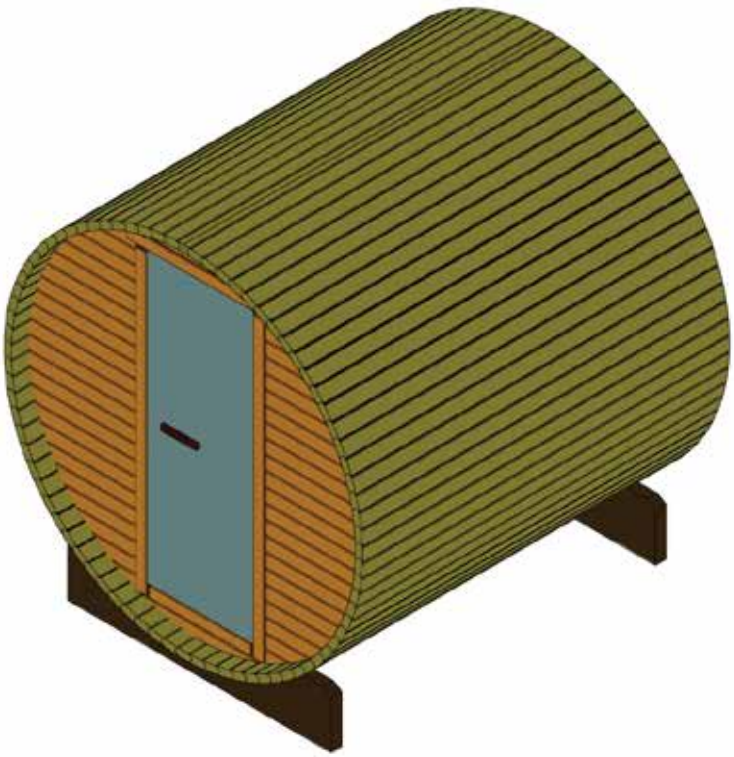

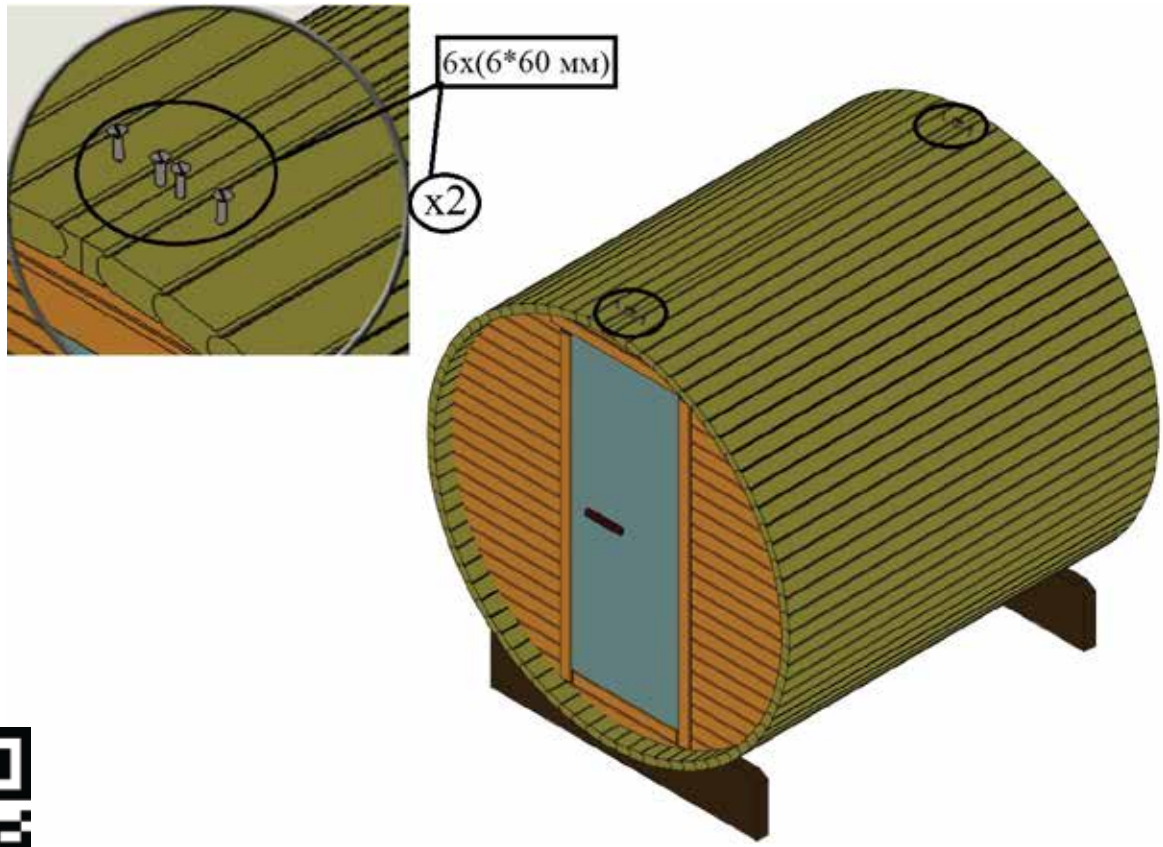

bsaunas.com

+1 (833) 727-0404
+1 (705) 727-0404

bsaunas
INDOOR & OUTDOOR

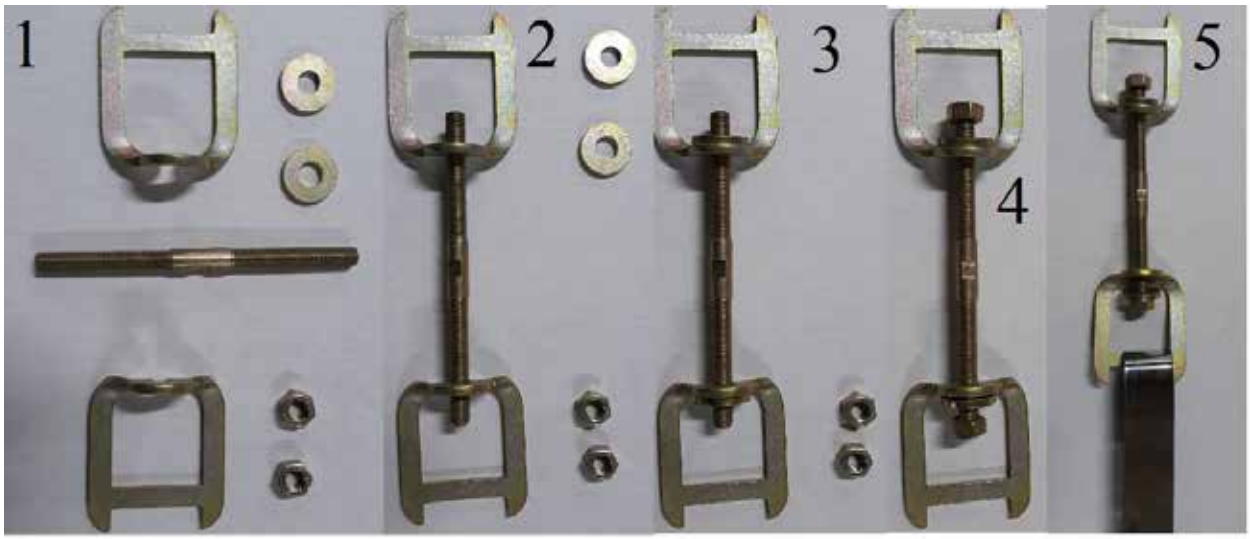

x2

bsaunas.com

+1 (833) 727-0404

+1 (705) 727-0404

bsaunas
INDOOR & OUTDOOR

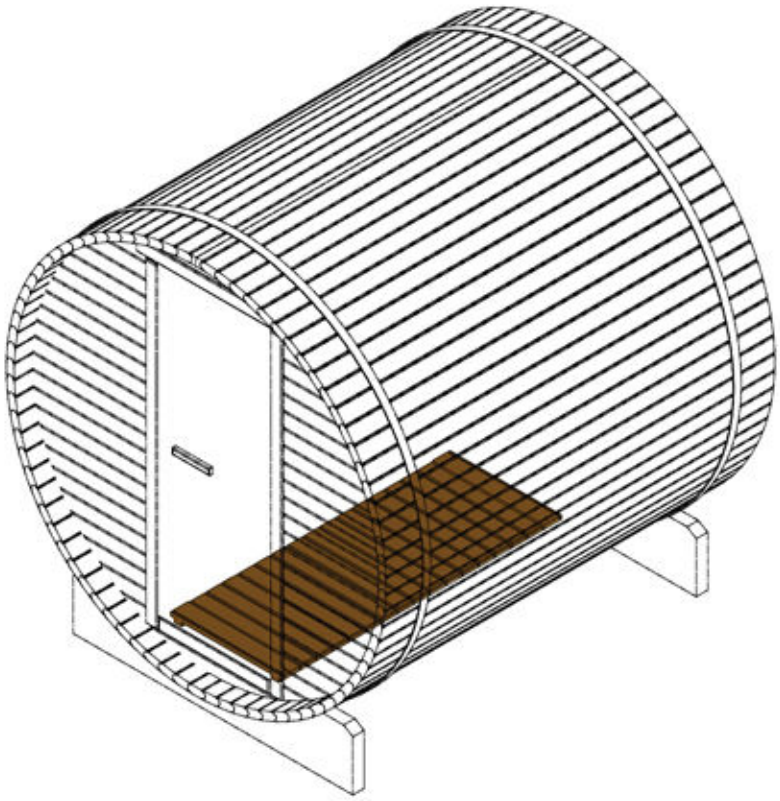

bsaunas.com

+1 (833) 727-0404

+1 (705) 727-0404

bsaunas
INDOOR & OUTDOOR

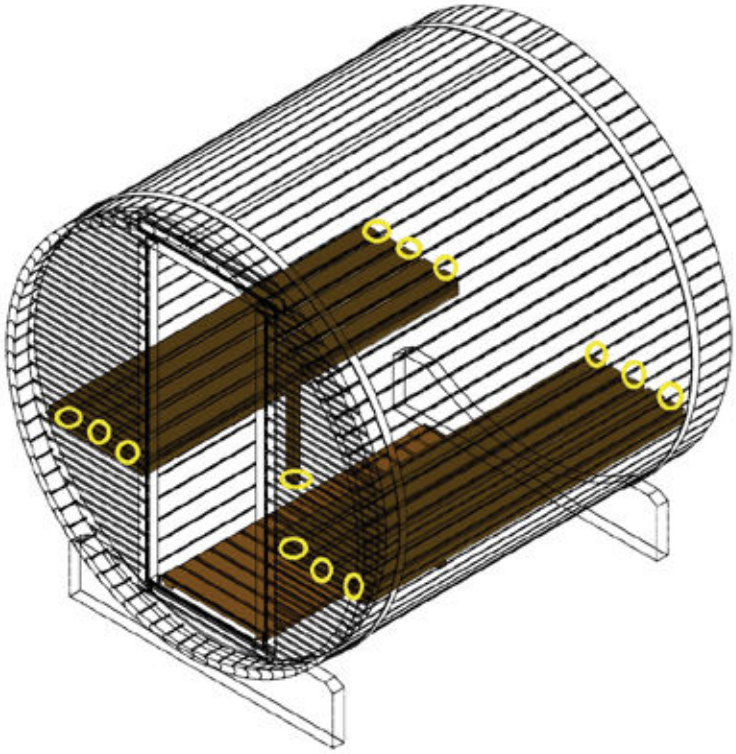

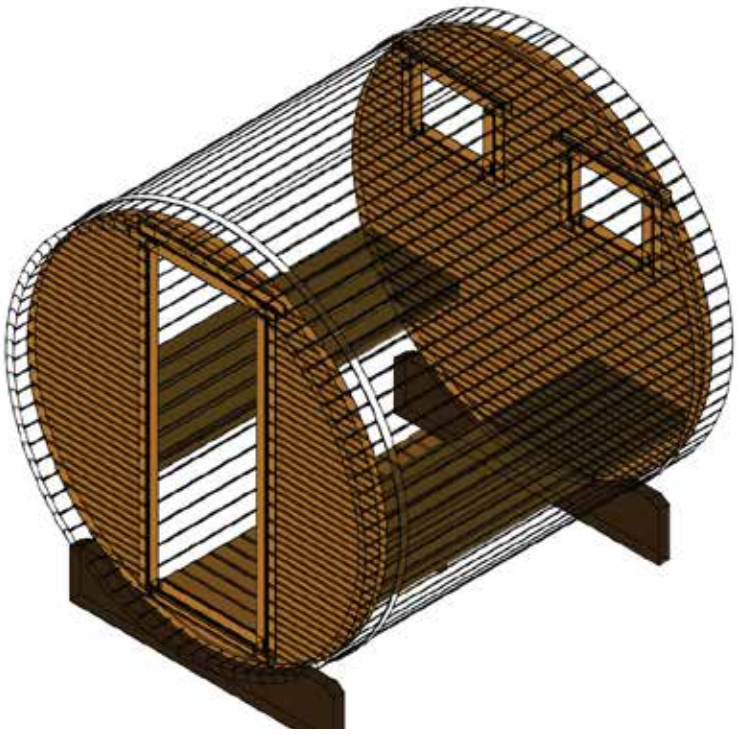

+1 (833) 727-0404
bsaunas.com
+1 (705) 727-0404

bsaunas
INDOOR & OUTDOOR

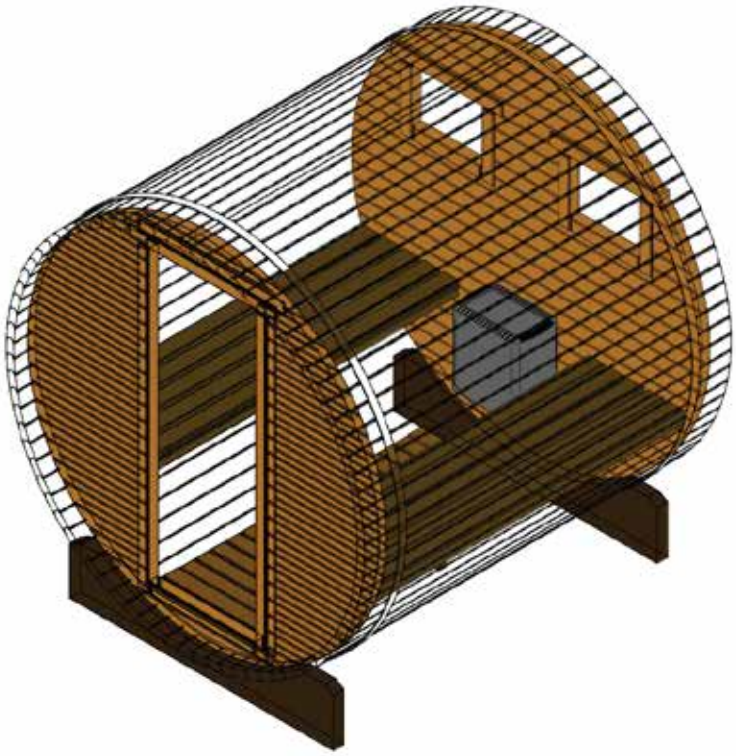

bsaunas.com

+1 (833) 727-0404

+1 (705) 727-0404